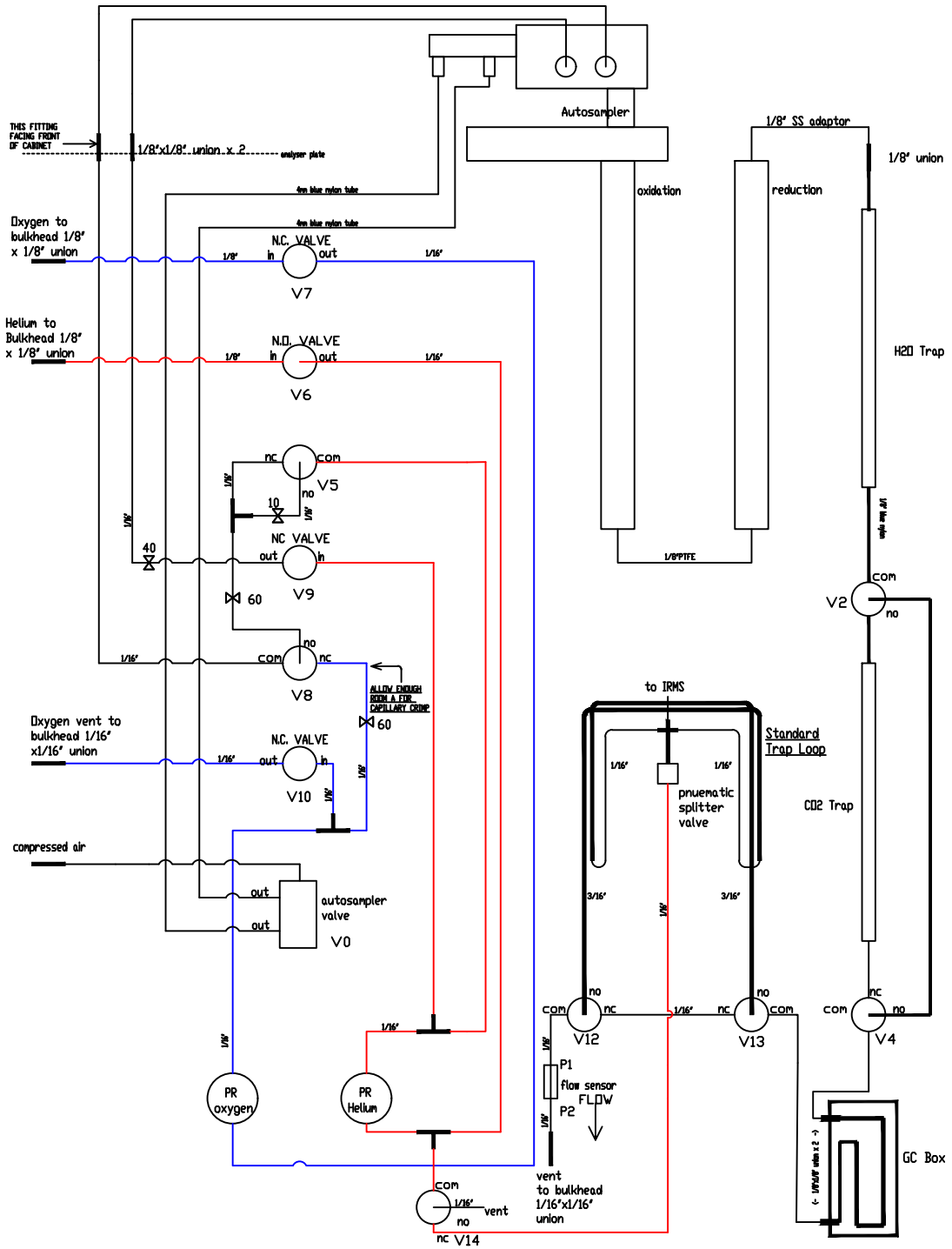

MOC	SEE INSTRUMENT HISTORY	20/09/2013	C1
MOC	ISSUED FOR MANUFACTURE	24/10/2012	C
	ISSUED FOR COMMENT		
ISSUED BY	DESCRIPTION	DATE	REV. No.

REMOVE ALL BURRS & SHARP EDGES	DO NOT SCALE	THIRD ANGLE
MATL.	ALL DIMENSIONS IN MILLIMETERS	
FINISH	TOLERANCES UNLESS OTHERWISE STATED ±0.15° ANGULAR 0. ±0.5 0.0 ±0.1 0.00 ±0.05 SURFACE FINISH 1.6µ	DRG. SIZE A1
DRN		SCALE NOT TO SCALE
TITLE	INTEGRA 2	DRG No 20802/004/003

STRICTLY CONFIDENTIAL COPYRIGHT SERCON LTD